ingegneria sismica
International Journal of Earthquake Engineering
Anno XXXIII – Speciale CTA 2015 – Num. 1-2

FULL AND PERFORATED METAL PLATE SHEAR WALLS AS BRACING SYSTEMS FOR SEISMIC UPGRADING OF EXISTING RC BUILDINGS

Antonio Formisano, Luca Lombardi, Federico M. Mazzolani*

Department of Structures for Engineering and Architecture, University of Naples "Federico II"

SUMMARY: *Metal Plate Shear Walls (MPSWs) represent an effective, practical and economical system for the seismic protection of existing RC framed buildings. They consist of one or more metallic thin plates, bolted or welded to a stiff steel frame, which are installed in the bays of RC framed structures. A case study of an existing RC residential 5-storey building, designed between the '60s and '70s of the last century and retrofitted with MPSWs, has been examined in this paper. The retrofitting design of the existing structure has been carried out by using four different MPSWs, namely three common full panels made of steel, low yield steel and aluminium and one innovative perforated steel plates. Finally, the used retrofitting solutions have been compared each to other in terms of performance and economic parameters, allowing to select the best intervention.*

KEYWORDS: *Metal Plate Shear Walls, seismic retrofitting, existing RC buildings, perforated plates, non-linear analyses*

1. INTRODUCTION

Steel Plate Shear Walls (SPSWs) represent an effective passive control system, characterized by both high initial stiffness and strength and a very stable hysteretic response up to large deformations, which can be used as a valid alternative to the classical concentrically braced frames [Longo *et al.* 2008a; 2008b] or eccentrically braced frames [Montuori *et al.,* 2014a; 2014b].

SPSWs are very effective in limiting the inter-storey drifts of framed buildings, also reducing the structure weight, as well the seismic forces, in comparison to RC shear walls. In addition, by using shop-welded or bolted connection types, the erection process can be ease, allowing a considerable reduction of construction costs. Application examples of such devices, having either bracing or dissipative functions, in new steel buildings are detected in Asia and America 0. However, SPSWs may be particularly profitable for seismic retrofitting of existing RC buildings, designed for gravity loads only, since their use confers to the existing structures a considerable performance increase. So, their use could protect existing structures from seismic damage, avoiding the failures occurred during recent Italian earthquakes [Formisano *et al.*, 2010; Formisano, 2012; Indirli *et al.*, 2013]. The beneficial contribution offered by shear panels is guaranteed by the development of a diagonal tensile bands mechanism (called *tension-field*), which is more effective as greater is the plate area involved

*Corresponding author: Antonio Formisano, Department of Structures for Engineering and Architecture, University of Naples "Federico II"
Email: antoform@unina.it

in the deformation process 0. In particular, when traditional full systems, arranged as simple steel panels without stiffeners, are employed, the optimal behaviour is guaranteed with plates having width/height ratios between 0.8 and 2.5 0.
Some studies have shown that when full SPSWs are used as bracing devices of framed buildings, they may compromise the capacity design criterion application, since excessive design forces are transferred to the surrounding frame members, thus increasing their size and costs 0. The scarce availability on the market of Low Yield Steel (LYS), usually used to limit the forces transmitted by the plates on the boundary steel frame [De Matteis et al., 2005; Formisano et al., 2006a], suggests the employment of aluminium alloys [Formisano et al., 2006b; De Matteis et al., 2012] and perforated steel plates 0 2007], which have the benefit of experiencing excursions in the plastic range already for low stress levels [Brando and De Matteis, 2014].
The behaviour of perforated SPSWs is similar to the behaviour of "dog-bone" connections in the case of steel moment resisting frames [Montuori, 2014; Piluso *et al.*, 2014], or to the role of a brace with reduced section in the case of concentrically braced frames [Giugliano *et al.*, 2010, Longo *et al.*, 2010]. A recent study performed by Authors has shown the suitability of such panels for seismic-resistant applications through the setup of an easy design tool for their application [Formisano *et al.*, 2015]
In this paper, the additional research on the comparison among two full Low-Yield (LY) (steel and aluminium) MPSWs and two perforated SPSWs for seismic upgrading of an existing RC framed structures has been done. To this purpose, the experimental test results conducted in Bagnoli (Naples) [Formisano *et al.,* 2010; De Matteis *et al.*, 2009] have been numerically calibrated on the basis of the finite element software SeismoStruct. With this software, the shear wall model has been implemented with the equivalent tensile diagonal one proposed by Thorburn et al. 0. The excellent experimental-to-numerical correspondence of results, validating the proposed model, has allowed the application of such devices for seismic reinforcing of an existing residential 5-storey RC building in Torre del Greco (Naples). Following the same design approach reported in 0, push-over analyses on the retrofitted structure with full LYMPSWs and differently-perforated SPSWs have been performed. Finally, the structural and economic differences among these solutions have been exposed and critically discussed.

2. SETUP OF A FEM MODEL

The choice of an appropriate and easily implementable FEM model to simulate the behaviour of MPSWs is a crucial importance task to understand the way they improve the performances of buildings hosting them. In order to carry out a parametric analysis on the application of both full and perforated MPSWs within existing RC framed structures, the FEM software SeismoStruct [Seismosoft, 2014] has been used. This software can predict the behaviour of three-dimensional framed structures under static and dynamic loads by taking into account both geometric and mechanical non-linearities.
For monotonic analyses, metal shear panels can be simply schematized by a single equivalent tensile diagonal having a cross-section area A_d calculated according to an elastic strain energy formulation as follows:

$$A_d = \frac{t\, b\, sin^2 2\alpha}{2\, sin\beta\, sin2\beta} \tag{1}$$

where t and b are the plate thickness and width, respectively, whereas α and β are the tension-field and diagonal angles of the steel plate measured from the vertical direction, respectively. An alternative more refined modelling technique is the strip model one, which schematise the plate as a series of elastic trusses. In this model the tension-field angle α is given by:

$$tan^4\alpha = \frac{1 + \frac{t\,b}{2\,A_c}}{1 + t\,d\left(\frac{1}{A_b} + \frac{d^3}{360\,I_c\,b}\right)} \tag{2}$$

where A_c and I_c are the cross-section area and the second moment of area of the surrounding columns, respectively, A_b is the beam cross-section area and d is the panel height 0. The Canadian code 0 provides the following minimum second moment of area I_c of columns adjoining SPSWs to prevent their excessive deformation, leading to premature buckling, under the pulling action of the plates:

$$I_c \geq \frac{0.00307\,t\,d^4}{b} \tag{3}$$

Any contribution offered from the plate buckled in compression can be neglected. In this condition, for width/height ratios between 0.8 and 2.5, the inclination of the generated tension-field can be directly assumed to be 45°.

When the equivalent diagonal system is subjected to an initial shear load V, a horizontal displacement δ_r is detected at the top (see Figure 1). By simple analytical steps, the elongation ΔL_d and tensile force N in the equivalent diagonal with length L_d and Young modulus E_d can be evaluated from Eqs. (4) and (5).

$$\Delta L_d = \delta_r sin\beta \tag{4}$$

$$N = E_d A_d\,\Delta L_d / L_d = V/sin\beta \tag{5}$$

According to Sabouri-Ghomi et al. 0, the behaviour of thin plates in a pinned joint frame is schematized through an elastic-perfectly plastic bilinear behaviour, where both the shear strength F_{py} and initial stiffness K_{pw} of the panel can be evaluated as follows:

$$F_{py} = \frac{C_{m1}}{2}\,\sigma_{ty}\,b\,t\,sin2\vartheta \tag{6}$$

$$K_{pw} = \frac{\frac{C_{m1}}{2}\,\sigma_{ty}\,sin2\vartheta}{\frac{2\,C_{m2}\,\sigma_{ty}}{E\,sin2\vartheta}}\frac{b\,t}{d} \tag{7}$$

In Eqs. (6) and (7), E and G are the normal and shear elasticity moduli of the metal plate, σ_{ty} is the tension-field stress in the plate yielding condition, ϑ is the tension-field angle, measured from the vertical direction, and C_{m1} and C_{m2} are modification factors, taking into account beam-to-column connections, plate-to-frame connections and the effect of both flexural behaviour and stiffness of boundary elements. Such modification factors have the limitations $0.8 < C_{m1} < 1.0$ and $1.0 < C_{m2} < 1.7$, but the Authors recognized that these

values will need further refinement as more test results will become available in the next future.

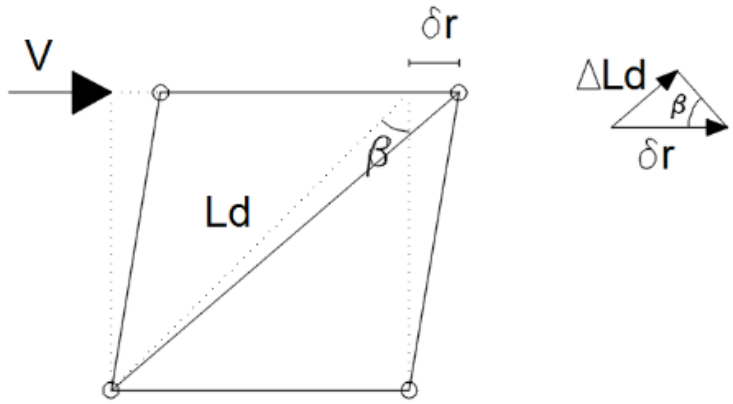

Figure 1. *Scheme of the equivalent tensile diagonal system*

Currently, a more careful estimation of these values has been obtained from the calibration of experimental tests carried out by Formisano et al. [2015], who proposed a useful analytical tool for their appraisal.

The predicted behaviour of the panel can be implemented by assigning to the equivalent diagonal a fictitious material with yielding strength $\sigma_{y,d}$ and normal elasticity modulus E_d evaluated through the Eqs. (8) and (9), respectively:

$$\sigma_{y,d} = \frac{F_{wy}}{A_d \, sin\beta} \tag{8}$$

$$E_d = \frac{K_w \, L_d}{A_d \, sin^2\beta} \tag{9}$$

In order to setup a valuable FEM model in SeismoStruct, the behaviour of the bare RC structure of Bagnoli 0 has been calibrated considering the above data. RC beams and columns have been modelled by *infrmFB* elements, while the floor has been characterized by a series of *elfrm* beams having the same stiffness and weight of the real floor. A 3D view of the modelled sub-structure is illustrated in Figure 2.

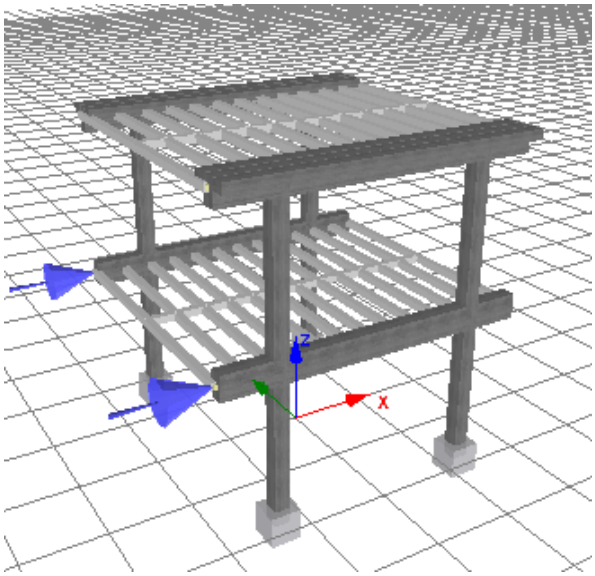

Figure 2. *Numerical model of the Bagnoli sub-structure setup with the SeismoStruct software*

Table 1. *Experimental-to-numerical comparison of vibration periods for the Bagnoli sub-structure*

	Vibration mode					
Period (s)	1	2	3	4	5	6
Experimental	0.625	0.556	0.455	0.208	0.186	0.147
Numerical	0.639	0.505	0.428	0.201	0.191	0.152

A reduced Young modulus E_c of RC beams and columns has been adopted for taking into account the degradation effect associated to the weather. In particular, $0.5E_c$ and $0.4E_c$ have been adopted for beams and columns, respectively. Degradation zones extended at lengths of 35 cm and 65 cm for beams and columns, respectively. The experimental-to-numerical modal comparison achieved with these assumptions is shown in Table 1. Subsequently, $0.3E_c$ and a reduced strength have been assumed for the column edges to consider the damages caused by the experimental pull-out test previously carried out in the transversal direction of the same structure upgraded with shape memory alloy bracings, as described in [Mazzolani, 2008].
In Figure 3, both the experimental curve and the final numerical one, the latter based on the real RC bare structure stiffness considering the previously reduction coefficients, are shown.
Once the initial structure behaviour has been calibrated, the steel frame hosting MPSWs has been modelled in SeismoStruct with elfrm elements to remain in the elastic range under the forces applied by the shear plates. The steel frame hinges have been modelled by link elements with translational stiffness infinitely greater than rotational one. Finally, the shear wall-to-RC beam connections have been modelled by means of rigid links.
The used MPSWs have been divided into six panel fields, having dimensions of 600x400 mm and being separated each to other by horizontal stiffeners, which have been numerically modelled by equivalent diagonals, as previously described (see Figure 4).
The equivalent tensile diagonal has been modelled by a *truss* element with elastic-plastic material, starting from the shear strength F_{wy} and initial stiffness K_w of the wall estimated as follows:

$$F_{wy} = \frac{C_{m1}}{2}\,\sigma_{ty}\,b\,t\,sin2\vartheta \tag{10}$$

$$K_w = \frac{\frac{C_{m1}}{2}\,\sigma_{ty}\,sin2\vartheta}{\frac{2\,C_p\,\sigma_{ty}}{E\,sin2\vartheta}}\frac{b\,t}{d} \tag{11}$$

where C_{m1} and C_p are modification factors, taking into account both the plate behaviour and the wall flexural effect, that should be properly calibrated [Formisano and Sahoo, 2015].
The calibration of the wall model in SeismoStruct has been conducted by deriving the force-displacement curve of the only-walls contribution. Knowing the force-displacement curve of the retrofitted structure and the initial structure one, calibrated and further pushed up to the same ultimate displacement, the only-walls contribution can be derived. By adopting the values of 1.0 and 5.4 for C_{m1} and C_p, respectively, the experimental curve appears to be well simulated by the numerical one (see Figure 5). The same comparison could be also done for the aluminium solution [De Matteis et al., 2008b; Formisano et al., 2006d], but, with the damages occurred after the test on steel panels and not repaired, a further calibration will be due.

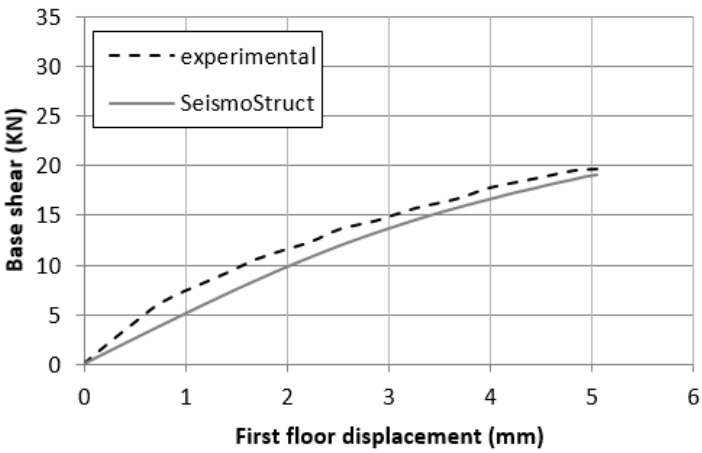

Figure 3. *Comparison between the experimental curve and the numerical one for the RC initial structure*

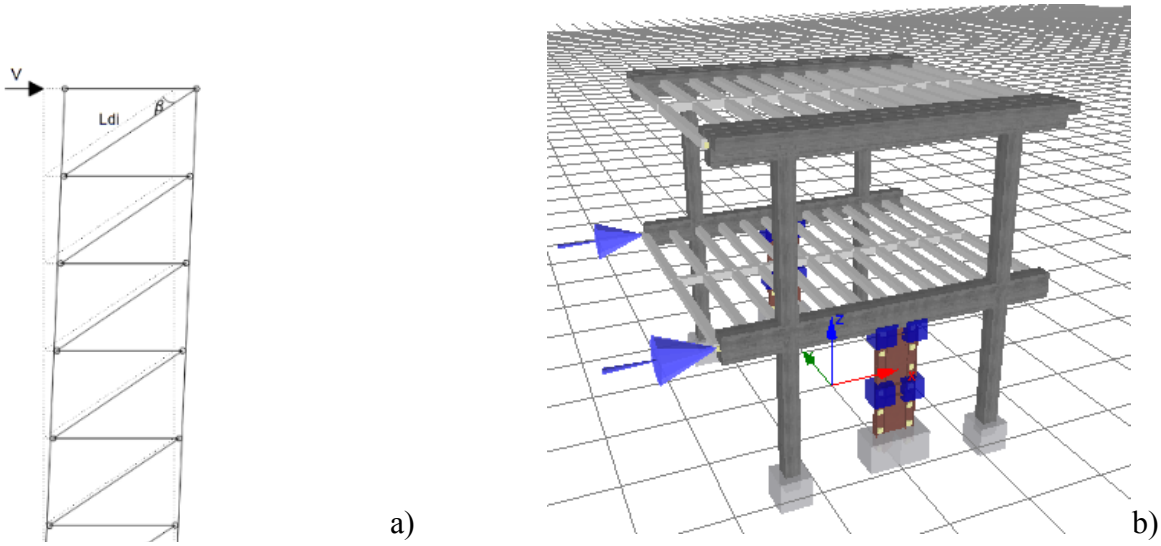

Figure 4. *Calculation scheme of the MPSW (a) and SeismoStruct numerical model of the retrofitted sub-structure (b)*

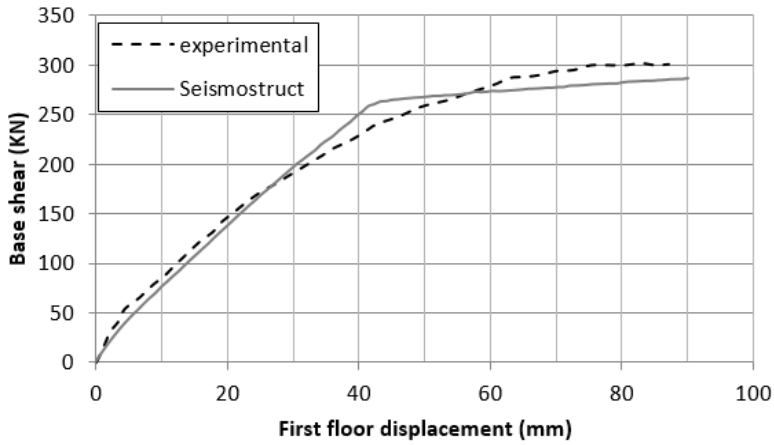

Figure 5. *Comparison between the experimental curve and the calibrated numerical one for the structure retrofitted with SPSWs.*

3. THE CASE STUDY

The benefits arising from the use of perforated steel panels instead of traditional full ones are already known [Purba and Bruneau, 2007]. However, few studies on existing RC buildings retrofitted with such devices are available. Therefore, in this paper, an existing building has been retrofitted with either traditional or perforated panels aiming at showing the different advantages deriving from their use. The case study is a residential multi-storey RC building in Torre del Greco (district of Naples, Italy), representative of the typical 1960s and 1970s constructions designed for gravity loads only. The building under investigation develops on five storeys with rectangular shape of dimensions 30x12 m (see Figure 6).

It has two bays in the transversal direction and seven bays in the longitudinal one. The ground floor, hosting commercial activities, has height of 4.0 m, while the heights of upper

floors are 3.2 m. The building total height is 16.8 m, without considering the top parapet. Seismic-resistant frames are placed in the longitudinal direction only. They are connected each to other in the transversal direction from both the slab and the edge beams only. The staircase is located in the building central position and it is made of 30x60 cm knee beams. Floors are made of RC - hollow tiles mixed slabs having depth of 28 cm and 24 cm at the intermediate levels and the top one, respectively.

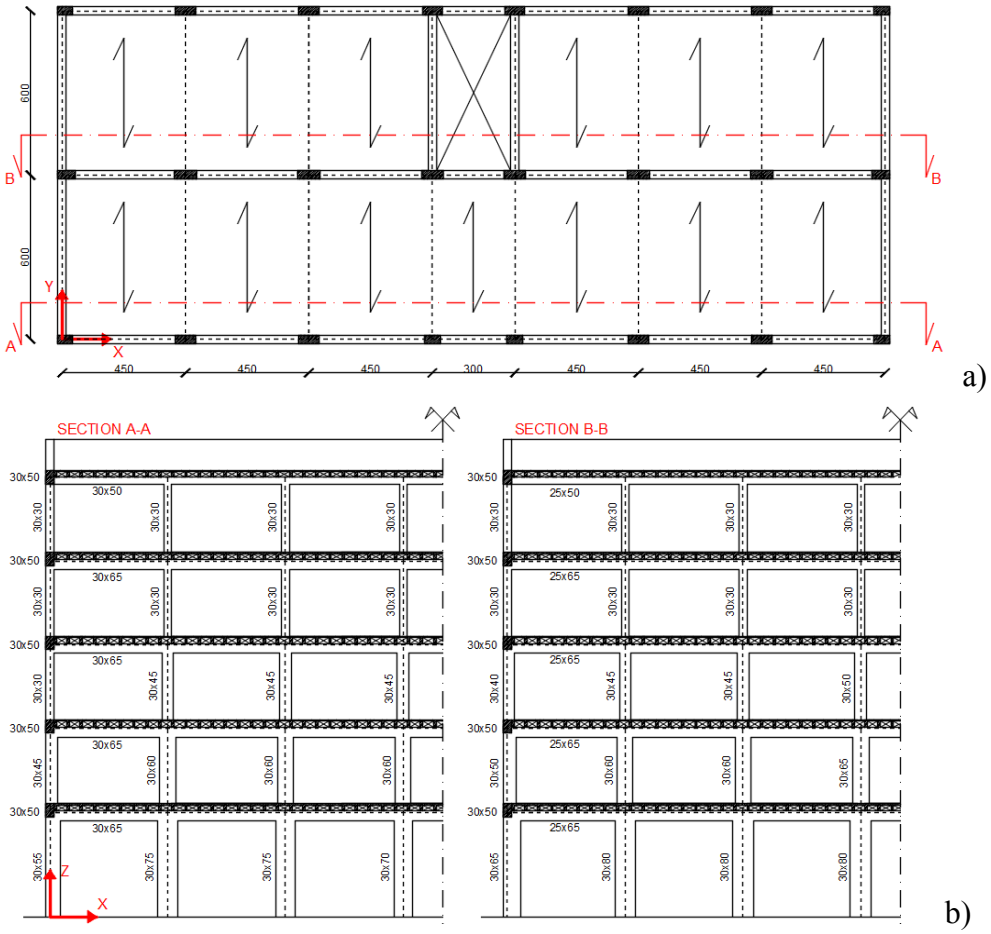

Figure 6. *Existing building under investigation: typical plan layout (a) and vertical sections (b)*

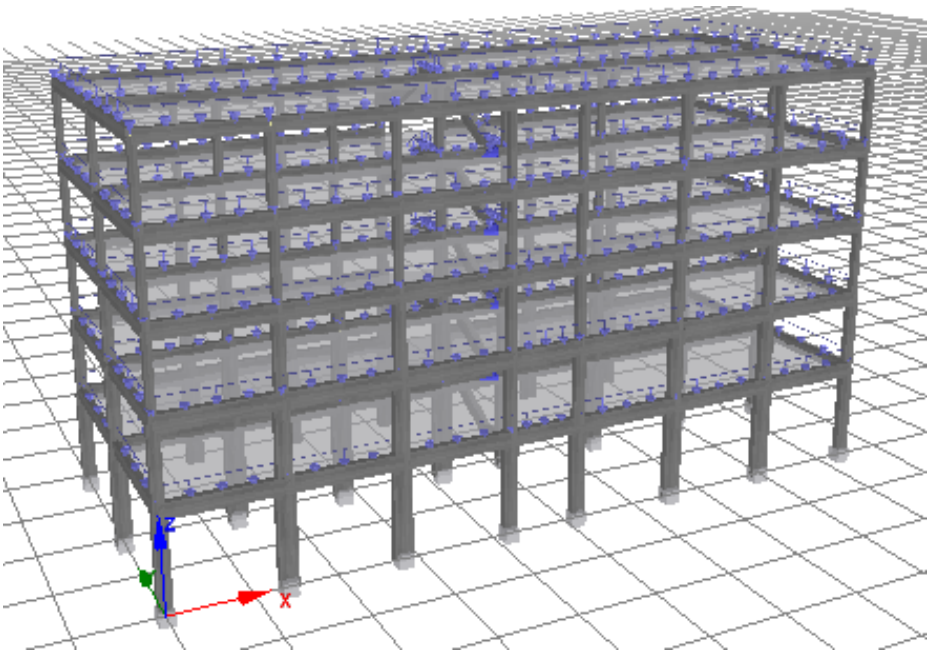

Figure 7. *Numerical model of the investigated existing 5-storey building*

In absence of specific documentation on carpentry, the elements sizes have been detected from in-situ inspections, whereas the reinforcement details have been deduced from an appropriate simulated design 0. According to the materials used at that construction time, $R_{cm}180$ concrete and Aq50 Italian steel (f_{ym} = 270 MPa and f_{um} = 550 MPa) have been considered. In order to take into account the presence of a cracking state of the structural members, according to [M.D. 14/01/08, 2008], a 50% reduced Young modulus has been assumed for both beams and columns.
The building is located on a soil type C having a peak ground acceleration a_gS equal to 0.28g and corresponding to a 975 years return period.
The three-dimensional view of the structure under study modelled with the SeismoStruct software is illustrated in Figure 7.

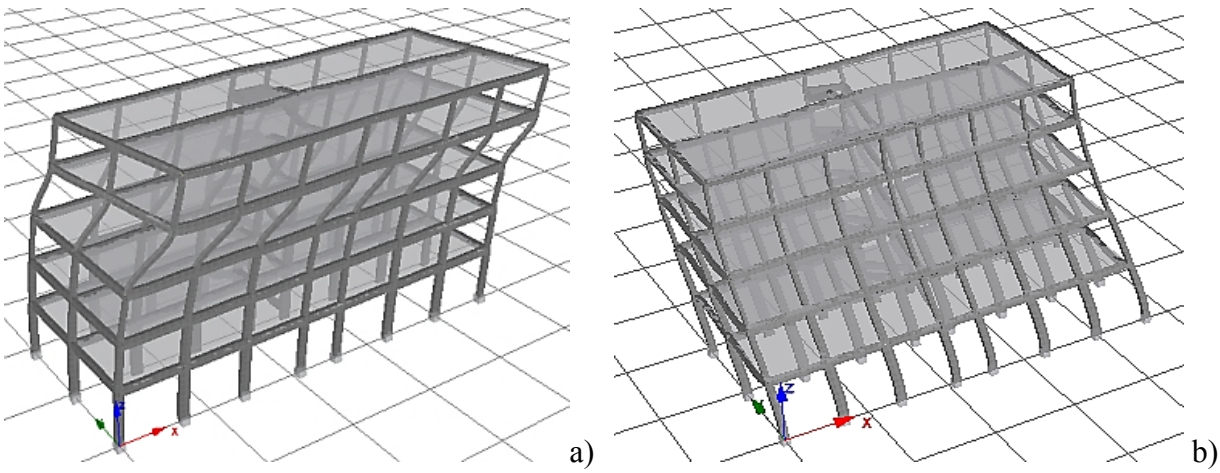

Figure 8. *Deformed shape of the building under pushover analysis in directions x (a) and y (b) (displacement amplification factor equal to 50)*

Table 2. Modal analysis results on the bare RC building

Mode	1 (U_y)	2 (R_z)	3 (U_x)
Period (s)	1.70	1.40	0.95
Participating Mass (%)	84	78	70

From the modal analysis, whose results are depicted in Table 2 and Figure 8, the building has shown a high deformability, especially in the transversal direction, due to the lack of frames. From the pushover analyses on the bare structure, it appears that in the longitudinal direction the seismic demand is particularly focused between the 3rd and 4th floor, where the variation of in elevation stiffness is very high (see Table 3). On the other hand, in the transversal direction, the failure is essentially caused by the staircase column collapse.
The seismic upgrading of the above RC building by means of full MPSWs, which provide to the structure where they are inserted a significant increase of initial stiffness, shear strength and dissipated energy, has been developed on the basis of the US procedures [ATC-40, 1996; FEMA-273, 1997]. Following a performance based design approach, which aims at increasing the overall lateral stiffness of the initial structure, the procedure involves the choice of a target spectral displacement of the retrofitted structure, $S_{d,pp}$, corresponding to a given performance level (operational, immediate occupancy, life safety or near collapse). Once the seismic hazard parameters are known, the elastic spectral acceleration $S_{ae,pp}$ is determined from the ADRS (Acceleration-Displacement Response Spectrum) format. So, the target period T_{ret} and the target stiffness K_{ret} of the retrofitted structure are calculated from Eqs. (12) and (13), respectively. In particular, in Eq. (13) the term T_{ini} is the fundamental period of the initial structure. After defining the performance points of the retrofitted structure, the stiffness contribution K_w provided by MPSWs is determined from Eq. (14), where the term K_{ini} is the initial structure stiffness.

$$T_{ret} = 2\pi\sqrt{S_{d,pp}/Sae,pp} \tag{12}$$

$$K_{ret} = K_{ini}\left(\frac{T_{ini}}{T_{ret}}\right)^2 \tag{13}$$

$$K_w = K_{ret} - K_{ini} \tag{14}$$

Considering that the retrofitted structure is able to provide at least the same damping level of the bare structure, the target shear strength of the retrofitted structure V_{ret} is obtained from Eq. (15), where V_{ini} and $S_{ai,ini}$ are the shear strength and the inelastic spectral acceleration of the initial structure, respectively, and $S_{ai,ret}$ is the retrofitted structure inelastic spectral acceleration. Finally, the contribution in terms of shear strength V_w given by MPSWs is evaluated through Eq. (16).

Table 3. *Regularity analysis of the initial structure*

Floor	Seismic Mass (t)	Relative mass variation	Direction x		Direction y	
			Lateral Stiffness (KN/m)	Lateral Stiffness variation	Lateral Stiffness (KN/m)	Lateral Stiffness variation
5	353	-25%	87877	0%	31419	-35%
4	473	0%	87760	-51%	48290	-21%
3	474	-1%	180779	-38%	60844	-14%
2	478	-4%	293620	-26%	70666	-21%
1	499	-	397521	-	89464	-

$$V_{ret} = V_{ini}\ \frac{S_{ai,ret}}{S_{ai,ini}} \tag{15}$$

$$V_w = V_{ret} - V_{ini} \tag{16}$$

In Figure 9, the response spectrum is plotted in the ADRS plane, considering the spectral acceleration reduction obtained with a damping equal to 20%.

Once the required stiffness and strength of the panels have been determined, their preliminary design is developed. In analogy with 0, an upgrading system with partial-bay SPSWs, arranged in one and two pairs along directions *x* and *y*, respectively, has been firstly designed (see Figure 10). The disposition of SPSWs has been dictated from both the necessity to reduce as much as possible the interruption of building activities and to respect architectural requirements.

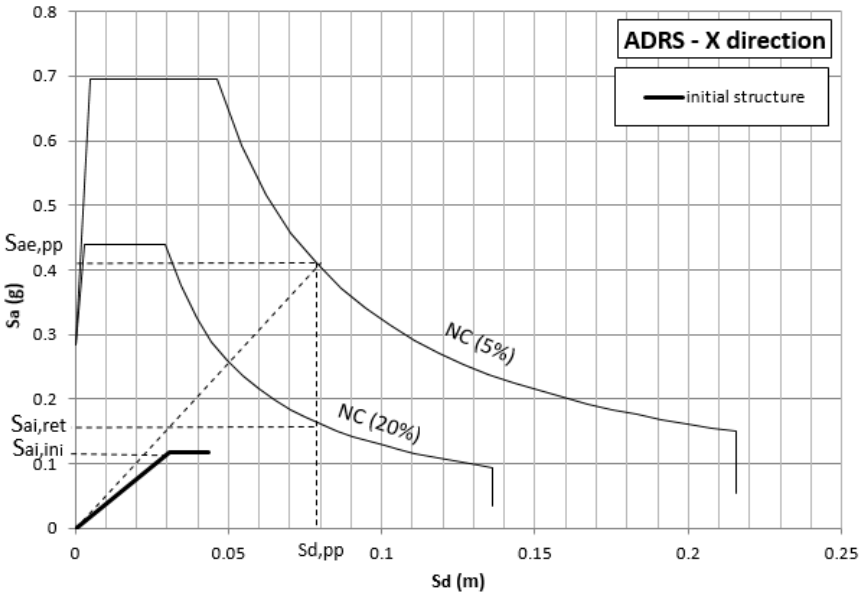

a)

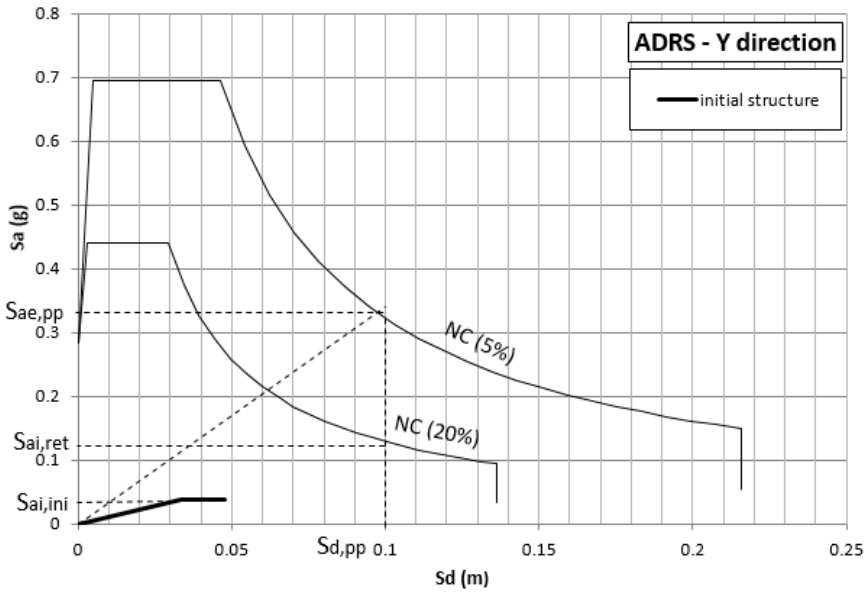

b)

Figure 9. *Capacity curves and performance points of the initial structure in directions x (a) and y (b)*

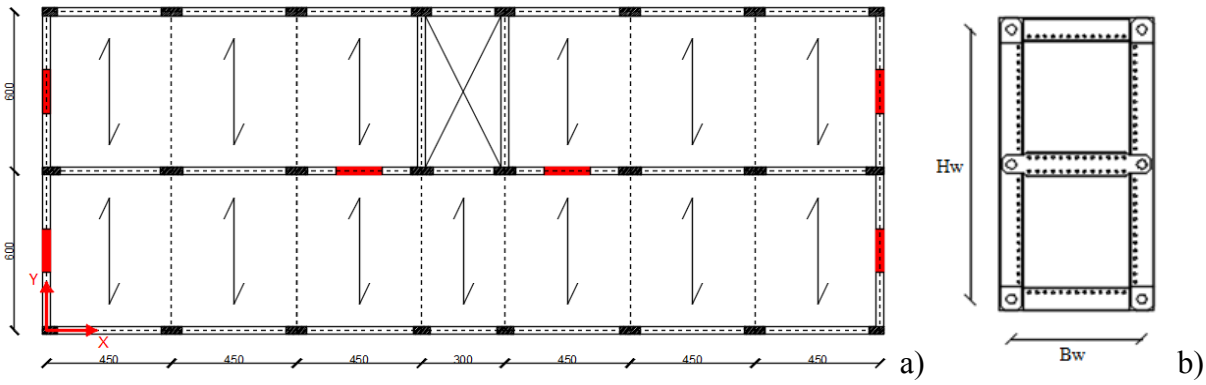

Figure 10. *Location of MPSWs (a) and details of the external frame (b)*

In order to respect the optimal panel shape ratio [Formisano et al., 2007] and considering the building inter-story height, the SPSW width B_w has been chosen equal to 1.65 m, while its depth has been divided in two equal parts by means of an intermediate steel beam placed inside the external frame. The shear walls design has been conducted initially considering the full S235 steel plates (see Tables 4 and 5).

The plate thicknesses have been firstly derived by reversing Eqs. (10) and (11) and by assuming C_{m1} and C_{m2} equal to 1.0 and 1.7 respectively, and $C_{p,x}$ and $C_{p,y}$ equal to 8.5 and 13.6 respectively. These modification factors are herein obtained by iterations in order to fit the numerical behaviour of the retrofitted structure to the design requirements both in terms of global strength and stiffness. Instead, the a priori knowledge of these values should be obtained from experimental tests on the designed shear walls.

Since the stiffness based design implies greater thicknesses than the strength based one, the values from the former design process have been considered, they being subsequently replaced by the most common commercial types. Then, the equivalent bracing behaviour is obtained through Eqs. (8) and (9) for implementation in the numerical analyses.

Table 4. *Thicknesses of full SPSWs derived from the strength design*

Floor	C_{m1}	B_p (mm)	$V_{pi,x}$ (kN)	$n_{p,x}$	$t_{p,x}$ (mm)	$V_{pi,y}$ (kN)	$n_{p,x}$	$t_{p,y}$ (mm)
5	1.0	1650	223	2	0.58	475	4	0.61
4		1650	465	2	1.20	989	4	1.27
3		1650	651	2	1.68	1383	4	1.78
2		1650	780	2	2.01	1658	4	2.14
1		1650	856	2	2.21	1818	4	2.34

Table 5. *Thicknesses of full SPSWs derived from the stiffness design*

Floor	E (MPa)	$K_{p,x}$ (KN/m)	$C_{p,x}$	$H_{p,x}$ (mm)	$t_{p,x}$ (mm)	$K_{p,y}$ (KN/m)	$C_{p,y}$	$H_{p,y}$ (mm)	$t_{p,y}$ (mm)
5	200000	14991	8.5	2300	1.78	31850	13.6	2400	3.15
4				2250	1.74			2400	3.15
3				2250	1.74			2400	3.15
2				2250	1.74			2400	3.15
1				3375	2.61			3450	4.53

Table 6. *Metallic materials considered for the shear walls design*

Material	f_y (MPa)	f_u (MPa)	ε_u	E (MPa)
Steel	235	360	35%	200000
LYS	*86	236	50%	200000
AW 1050A	*21	80	45%	70000

Assuming to guarantee the same lateral stiffness level of the full SPSWs, the study has been extended by considering full LYS (LYS-PSWs) and aluminium (AW1050A-PSW) plates, as well as perforated S235 steel ones. Table 6 shows the mechanical properties of the materials considered in the retrofit design.

Two drilling configurations have been proposed for perforated SPSWs. The first solution is characterized by plates with 36 holes having diameter of 160 mm and hole percentage ρ, that is the ratio between the holes areas A_{holes} and the panel one A_{sup}, equal to 40%, while the second solution has 36 holes having diameter of 190 mm and ρ equal to 60%. The behaviour of the perforated panels has been implemented in the FEM model by adopting a linear reduction of the modification factors in comparison to those used for full panels. The modification factor values assumed for C_{m1} and C_{m2} are equal to 0.40 and 0.70, respectively, for ρ = 40%, and to 0.20 and 0.40, respectively, for ρ = 60%.

Table 7 shows the commercial plate thicknesses used in the following analyses. Due to the different Young modulus, aluminium plates thicker than steel ones are considered in order to have comparable results among solutions in terms of the global stiffness of the retrofitted structures. The steel frame surrounding MPSWs has been designed to both possess an adequate stiffness and remain in the elastic field when the plates exhibit significant plastic strains. This outcome is achieved for full panels by both using the Eq. (3) and accomplishing the strength check of elements under the actions induced by the tension-field mechanism 0. So, the S275 steel coupled UPN profiles in Table 8 have been obtained from this design procedure applied to the examined shear walls.

Table 7. *Commercial plate thicknesses used in the numerical analyses*

Floor	Steel plates		AW1050A Plates	
	$t_{p,x}$ (mm)	$t_{p,y}$ (mm)	$t_{p,x}$ (mm)	$t_{p,y}$(mm)
1	1.80	4.00	4.00	7.00
2	1.80	4.00	4.00	7.00
3	1.80	4.00	4.00	7.00
4	1.80	4.00	4.00	7.00
5	3.00	5.00	6.00	10.00

Table 8. *The assumed steel frame members for different MPSWs*

Floor	Full SPSWs		Perf. (40%) SPSWs & LYS-PSWs		Perf. (60%) SPSWs & AW1050A-PSW	
	Dir. X	Dir. Y	Dir. X	Dir. Y	Dir. X	Dir. Y
5	2×UPN160	2×UPN240	2×UPN120	2×UPN180	2×UPN120	2×UPN120
4	2×UPN160	2×UPN240	2×UPN120	2×UPN180	2×UPN120	2×UPN120
3	2×UPN160	2×UPN240	2×UPN120	2×UPN180	2×UPN120	2×UPN120
2	2×UPN160	2×UPN240	2×UPN120	2×UPN180	2×UPN120	2×UPN120
1	2×UPN260	2×UPN320	2×UPN160	2×UPN220	2×UPN120	2×UPN160

Table 9. *The assumed steel members for strengthening of the RC beams*

Floor	Full SPSWs	Perf. (40%) SPSWs & LYS-PSWs	Perf. (60%) SPSWs & AW1050A-PSW
	Dir. X-Y	Dir. X-Y	Dir. X-Y
5	2×UPN260	2×UPN240	2×UPN220
4	2×UPN260	2×UPN240	2×UPN220
3	2×UPN260	2×UPN240	2×UPN220
2	2×UPN260	2×UPN240	2×UPN220
1	2×UPN300	2×UPN280	2×UPN260

Moreover, in order to transfer the actions to the walls, the RC beams have been reinforced, analogously to the experimentation performed in [De Matteis et al., 2008a; Formisano et al., 2006c], by means of two S275 steel coupled UPN profiles fixed to the RC beams by means of steel bolts (see Table 9).

The analysis results on the retrofitted structures have shown that, due to the failure of existing columns, further interventions on other RC members are necessary in order to achieve the target displacement. Therefore, the retrofitting project has been completed with RC jacketing of the longitudinal perimeter columns at the 3rd and 4th floors, of the transversal perimeter columns from the 2nd to 4th floors and of the stair case columns up to the 4th floor.

Furthermore, jacketing with steel profiles has been done for members incurring brittle failure due to shear. These additional interventions on the existing members have been designed to ensure the expected performance of the structure up to the target displacement. Figure 11 shows the results obtained from the pushover analyses on the structure equipped with the mentioned interventions.

The results show that the shear strength of the structure retrofitted with full SPSWs is clearly higher than the other solutions one. As a negative consequence, the greater actions induced by the full SPSWs on the RC structure have requested the design of additional local retrofitting interventions. Also for the other solutions additional interventions on the main RC structure have been foreseen, but they have been more economic than those required by using full SPSWs. In particular, although the solutions based on plates with low yield strength metals (low yield steel and aluminium) seem to be structurally comparable with those based on perforated traditional steel plates, the differences are noticed from the economic point of view (see Table 10).

Table 10. *Economic comparison among examined solutions*

Wall Type	Plates (€)	Perimeter Steel Frame (€)	Local Interventions (€)	Total (€)
Full SPSWs	14200	36000	72000	122200
Perf. (40%) SPSWs	15100	22500	68400	106000
Perf. (60%) SPWSs	15100	17800	64100	97000
LYS-PSW	19900	22500	68400	110800
AW1050A-PSW	37100	17800	64100	119000

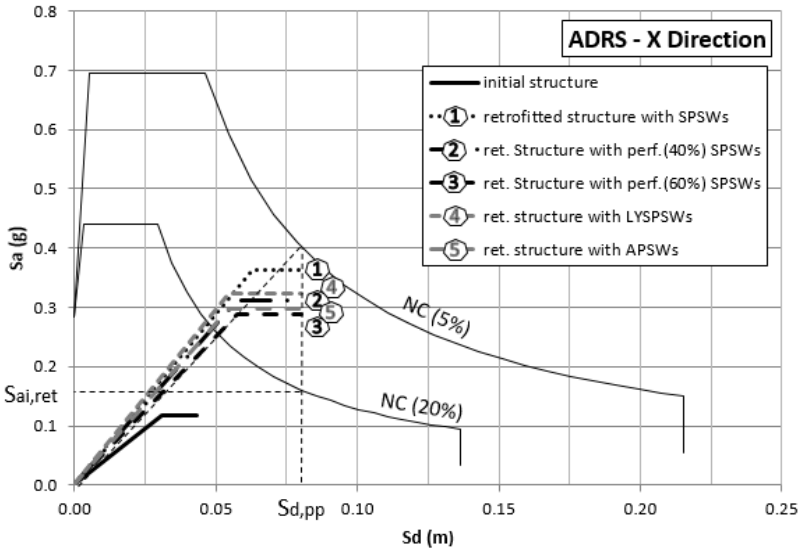

a)

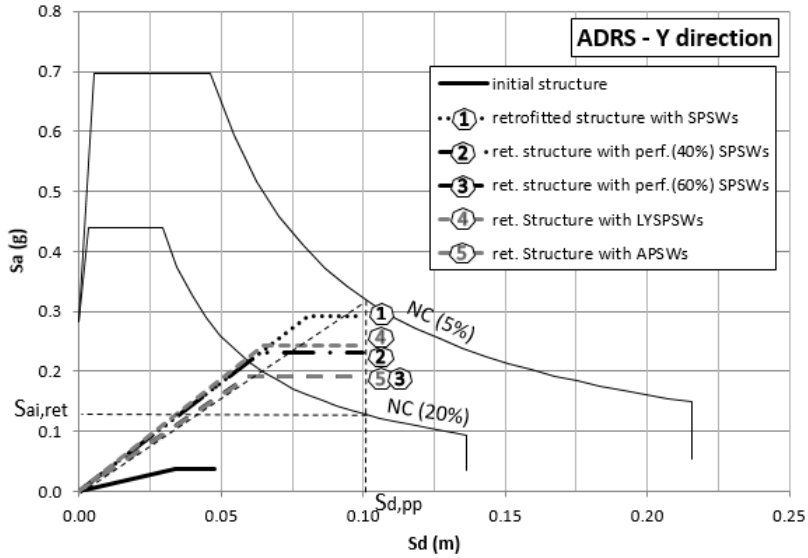

b)

Figure 11. *Capacity curves of initial and retrofitted structures in directions x (a) and y (b)*

In fact, considering the current Italian costs of both steel elements and local reinforcing interventions, a cost saving of at least 16% and 27% has been respectively estimated for the less drilled and the more drilled perforated SPSWs with respect to the installation of full SPSWs. This confirms the benefits deriving from the use of perforated SPSWs.

4. CONCLUDING REMARKS

In this paper a study aimed to show the benefits of using perforated SPSWs for seismic protection of existing RC buildings has been carried out. The use of such systems, already known in literature for applications into new steel structures, can be particularly advantageous for retrofitting existing structures designed without seismic criteria, although the actual Eurocodes do not provide any indications.

When referred to existing RC structures, the use of traditional full SPSWs may involve the transfer of excessive stresses on the boundary members induced by the plate tension-field mechanism. Such stresses can lead to the design of massive interventions, which are very often economically inconvenient.
Starting from these premises, in the first part of the paper, the availability of recent experimental test results on a real RC building retrofitted with SPSWs has allowed both to calibrate and validate a simple FEM model developed with the SeismoStruct software.
Subsequently, the case study of an existing multi-storey RC building retrofitted with full MPSWs (traditional steel, low yield steel and aluminium plates) and perforated SPSWs, has been numerically analyzed in the static non-linear field. The main benefit deriving from the use of perforated plates is to choose *a priori* the shear strength they offer on the basis of a given drilling configuration, according to the design requirements, without changing the geometric dimensions of the walls, which sometimes represent data assigned for architectural requirements impossible to be modified. By increasing properly the drilling configuration, a significant shear strength reduction is achieved without excessively compromise both the stiffness and the ductility of the retrofitted structure. In fact, by choosing an appropriate drilling pattern, it is possible to reach large drifts without fractures around the holes, which could decrease the shear capacity. In the examined application, the analysis results have shown that perforated SPSWs with drilling percentages of 40% and 60%, provide cost savings in the retrofit design of at least 16% and 27%, respectively, compared to the cost deriving from using full plates. Although perforated SPSWs realized by common steel plates can be a viable alternative to others stiffening solutions based on more expensive (aluminium) and not available on the European market (Low Yield Steel) metals, further experimental tests are necessary for the validation of modification factor values, to be used in approved design formulas, which could extend their use on the market for seismic retrofitting interventions.

5. ACKNOWLEDGEMENTS

The Authors would like to acknowledge the Seismosoft s.r.l. company for the kind supply of the SeismoStruct software used for numerical analyses.

6. REFERENCES

Astaneh-Asl, A. [2000] “Seismic Behavior and Design of Steel Shear Walls”, *Steel Technical Information and Product Services Report*, Structural Steel Educational Council, Moraga, CA.

Basler, K. [1961] “Strength of plate girders in shear”, *J. Struct. Div.*, *ASCE* 87 (7), 150-180.

Applied Technology Council (ATC)-40, [1996] “Seismic evaluation and retrofit of concrete buildings”, *Report SSC 96-01*, vol. 1.

Bhowmick, A. K., Grondin, G. Y. and Driver, R. G. [2014] “Nonlinear seismic analysis of perforated steel plate shear walls”, *Journal of Constructional Steel Research* 94, 103-113.

Brando, G. and De Matteis, G. [2014] “Design of low strength-high hardening metal multi-stiffened shear plates”, *Engineering Structures* 60, 2-10.

Canadian Standards Association (CSA) [2001] *Limit states design of steel structures - CAN/CSA S16-01*, Willowdale, Ontario, Canada.

De Matteis, G., Brando, G., Mazzolani, F.M. [2012] “Pure aluminium: An innovative material for structural applications in seismic engineering”, *Construction and Building Materials*, 26 (1), 677-686.

De Matteis, G., Formisano, A. and Mazzolani, F. M. [2008a] "RC structures strengthened by metal shear panels: experimental and numerical analysis", *Proc. of the 2008 Seismic Engineering Conference commemorating 1908 Messina and Reggio Calabria Earthquake (MERCEA'08)*, Reggio Calabria, Italy, Vol. 1, 27-34.

De Matteis, G., Formisano, A., Mazzolani F.M. and Panico, S. [2005] "Design of low-yield metal shear panels for energy dissipation", *Improvement of Buildings' Structural Quality by New Technologies - Proceedings of the Final Conference of COST Action C12*, Innsbruck, Austria, 665-675.

De Matteis, G., Formisano, A., Panico, S. and Mazzolani, F.M. [2008b] "Numerical and experimental analysis of pure aluminium shear panels with welded stiffeners", Computers & Structures 86, 545-555.

De Matteis, G., Formisano, A. and Mazzolani, F.M. [2009] "An innovative methodology for seismic retrofitting of existing RC buildings by metal shear panels", *Earthquake Eng. & Struct. Dynamics* 38, 61-78.

Federal Emergency Management Agency (FEMA)-273 [1997] *Guidelines for the seismic rehabilitation of buildings*, Washington (DC).

Formisano, A. [2012] "Seismic damage assessment of school buildings after 2012 Emilia Romagna earthquake". *Journal of Earthquake Engineering, Special Number "Emilia Romagna earthquake – May 2012"*, 2-3, 72 – 86.

Formisano, A. and Mazzolani, F.M. [2015] "On the selection by MCDM methods of the optimal system for seismic retrofitting and vertical addition of existing buildings", Computers and Structures 159, 1-13.

Formisano, A. and Sahoo, D.R. [2015] "Steel shear panels as retrofitting system of existing multi-story RC buildings: case studies", Advances in Structural Engineering, Vol.1, 1 January 2015, Pages 495-512.

Formisano, A., De Matteis G. and Mazzolani, F.M. [2010] "Numerical and experimental behaviour of a full-scale RC structure upgraded with steel and aluminium shear panels", *Computers and Structures* 88, 1348-1360.

Formisano, A., Lombardi, L. and Mazzolani, F.M. [2015] "On the use of perforated metal shear panels for seismic-resistant application", *Proc. of the 8th International Conference on Behaviour of Steel Structures in Seismic Areas (STESSA 2015)*, Shanghai, China, 409-416.

Formisano, A., Mazzolani, F.M. and De Matteis, G. [2007] "Numerical analysis of slender steel shear panels for assessing design formulas", *International Journal of Structural Stability & Dynamics* 7, 273-294.

Formisano, A., De Matteis, G., Panico, S. and Mazzolani, F.M. [2006a] "Full scale test of an existing RC frame reinforced with pure aluminium shear panels", *Proc. of the Int,Colloquium on Stability and Ductility of Steel Structures (SDSS '06)*, Lisbon, Portugal, 903-910.

Formisano, A., De Matteis, G., Panico, S. and Mazzolani, F.M. [2008]. "Seismic upgrading of existing RC buildings by slender steel shear panels: a full-scale experimental investigation", *Advanced Steel Construction* 4, 26-45.

Formisano, A., De Matteis, G., Panico, S., Calderoni, B. and Mazzolani, F.M., [2006b] "Full-scale test on existing RC frame reinforced with slender shear steel plates", Proc. of the 5th International Conference on Behaviour of Steel Structures in Seismic Areas (STESSA 2006), Yokohama, Japan, 827-834.

Formisano,, A., De Matteis, G., Panico, S., Calderoni, B. and Mazzolani, F.M. [2006c] "Full-scale experimental study on the seismic upgrading of an existing R.C. frame by means of slender steel shear panels", *Proc. of the Int. Conference in Metal Structures (ICMS '06),* Poiana Brasov, Romania, 609-617.

Formisano, A., Di Feo, P., Grippa, M.R. and Florio, G. [2010] "L'Aquila earthquake: A survey in the historical centre of Castelvecchio Subequo", *COST ACTION C26: Urban Habitat Constructions under Catastrophic Events - Proceedings of the Final Conference*, Nsples, Italy, 371-376.

Formisano, A., Mazzolani, F.M., Brando, G. and De Matteis, G. [2006d] "Numerical evaluation of the hysteretic performance of pure aluminium shear panels", *Proc. of the 5th International Conference on Behaviour of Steel Structures in Seismic Areas (STESSA 2006)*, Yokohama, Japan, 211-217.

Giugliano, M.T., Longo, A., Montuori, R. and Piluso, V. [2010] "Plastic design of CB-frames with reduced section solution for bracing members", *Journal of Constructional Steel Research* 66 (5), 611-621.

Indirli, M., Kouris, L. A. S., Formisano, A., Borg, R. P. and Mazzolani, F. M. [2013] "Seismic damage assessment of unreinforced masonry structures after the Abruzzo 2009 earthquake: the case study of the historical centres of L'Aquila and Castelvecchio Subequo", *International Journal of Architectural Heritage,* 7 (5), 536-578.

Longo, A., Montuori, R. and Piluso, V. [2008a] "Failure mode control of X-braced frames under seismic actions", *Journal of Earthquake Engineering* 12 (5), 728-759.

Longo, A., Montuori, R. and Piluso, V. [2008b] "Influence of design criteria on the seismic reliability of X-braced frames", *Journal of Earthquake Engineering* 12 (3), 406-431.

Longo, A., Montuori, R. and Piluso, V. [2009] "Seismic reliability of chevron braced frames with innovative concept of bracing members", *Advanced Steel Construction* 5 (4), 367-389.

Ministerial Decree (M.D.) 14/01/08 [2008] "Approval of new technical codes for constructions" (in Italian), *Official Gazette of the Italian Republic No. 29*.

Mistakidis, E. S., De Matteis, G. and Formisano, A. [2007] "Low yield metal shear panels as an alternative for the seismic upgrading of concrete structures", *Advances in Engineering Software* 38, 626-636.

Montuori, R. [2014] "The influence of gravity loads on the seismic design of RBS connections", *Open Construction and Building Technology Journal* 8, 248-261.

Montuori, R., Nastri, E. and Piluso, V. [2014a] "Theory of plastic mechanism control for eccentrically braced frames with inverted y-scheme", *Journal of Constructional Steel Research* 92, 122-135.

Montuori, R., Nastri, E. and Piluso, V. [2014b] "Theory of plastic mechanism control for the seismic design of braced frames equipped with friction dampers", *Mechanics Research Communications* 58, 112-123.

Mazzolani, F.M. [2008] "Innovative metal systems for seismic upgrading of RC structures", *Journal of Constructional Steel Research* 64, 882-895.

Piluso, V., Montuori, R. and Troisi, M. [2014] "Innovative structural details in MR-frames for free from damage structures", *Mechanics Research Communications,* Vol. 58, 146-156.

Purba, R. and Bruneau, M. [2007] "Design recommendations for perforated steel plate shear walls", *Technical Rep. MCEER-07-0011*, Multidisciplinary Center for Earthquake Engineering Research, State Univ. of New York, Buffalo, N.Y.

Royal Decree (R.D.) n. 2229 [1939] "Standards for the execution of concrete and reinforced concrete constructions" (in Italian).

Sabouri-Ghomi, S., Ventura, C.E. and Kharrazi, M.H.K. [2005] "Shear analysis and design of ductile steel plate walls", *Journal of Structural Engineering* 131, 878-889.

Seismosoft [2014] *SeismoStruct v7.0 – A computer program for static and dynamic nonlinear analysis of framed structures*, available from http://www.seismosoft.com.

Thorburn, L.J., Kulak, G.L. and Montgomery, C.J. [1983] "Analysis of steel plate shear walls", *Struct. Eng. Rep. No. 107*, Dept. of Civ. Eng., University of Alberta, Canada.

Timler, P.A. and Kulak, G.L. [1983] "Experimental study of steel shear walls", *Struct. Eng. Rep. No. 114*, Dept. of Civ. Eng., University of Alberta, Edmonton, Alberta, Canada.

Vian, D. and Bruneau, M. [2005] "Steel plate shear walls for seismic design and retrofit of building structures", *Technical Rep. MCEER-05-0010*, Multidisciplinary Center for Earthquake Engineering Research, State Univ. of New York, Buffalo, N.Y.

ingegneria sismica
International Journal of Earthquake Engineering
Anno XXXIII – Speciale CTA 2015 – Num. 1-2

PARETI A TAGLIO METALLICHE COME SISTEMI DI CONTROVENTAMENTO PER L'ADEGUAMENTO SISMICO DI STRUTTURE ESISTENTI IN C.A.

Antonio Formisano, Luca Lombardi, Federico M. Mazzolani*

Department of Structures for Engineering and Architecture, University of Naples "Federico II"

SOMMARIO: *Le pareti a taglio metalliche rappresentano un sistema efficace, pratico ed economico per la protezione sismica di edifici esistenti in c.a.. Questi sistemi consistono in uno o più piatti sottili metallici, bullonati o saldati ad un telaio di acciaio rigido, che vengono installati all'interno delle campate della struttura intelaiata in c.a. Il comportamento del sistema è caratterizzato dallo sviluppo di bande diagonali di trazione (meccanismo di tension-field), che dipendono dalla dimensione dei piatti e dalla presenza di irrigidimenti flessionali o di aperture al loro interno. In questo articolo, è stato esaminato un caso studio di un edificio esistente in c.a. di 5 piani, progettato tra gli anni '60 e '70 dello scorso secolo, adeguato con pareti a taglio metalliche. Il progetto di adeguamento della struttura esistente è stato effettuato mediante quattro sistemi di pareti a taglio: tre pannelli a parete piena realizzati in acciaio tradizionale, acciaio a basso snervamento ed alluminio ed un pannello innovativo di tipo perforato in acciaio. Le differenti tipologie di pannelli impiegate sono state in conclusione confrontate*

*Corresponding author: Antonio Formisano, Department of Structures for Engineering and Architecture, University of Naples "Federico II"
Email: antoform@unina.it